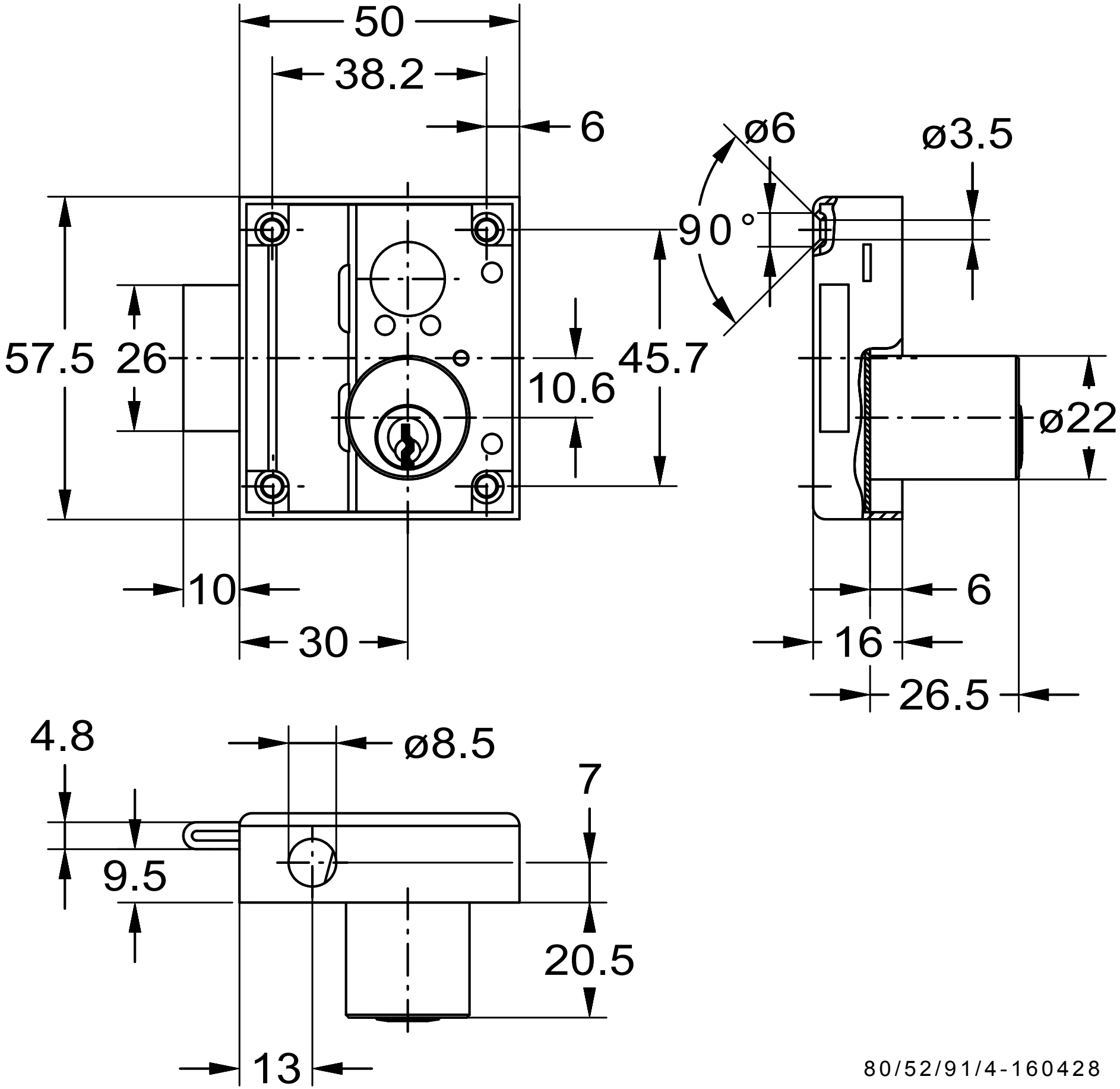
50
38.2
6
ø6
ø3.5
90°
57.5
26
10.6
45.7
ø22
10
30
6
16
26.5
4.8
ø8.5
7
9.5
20.5
13
80/52/91/4-160428