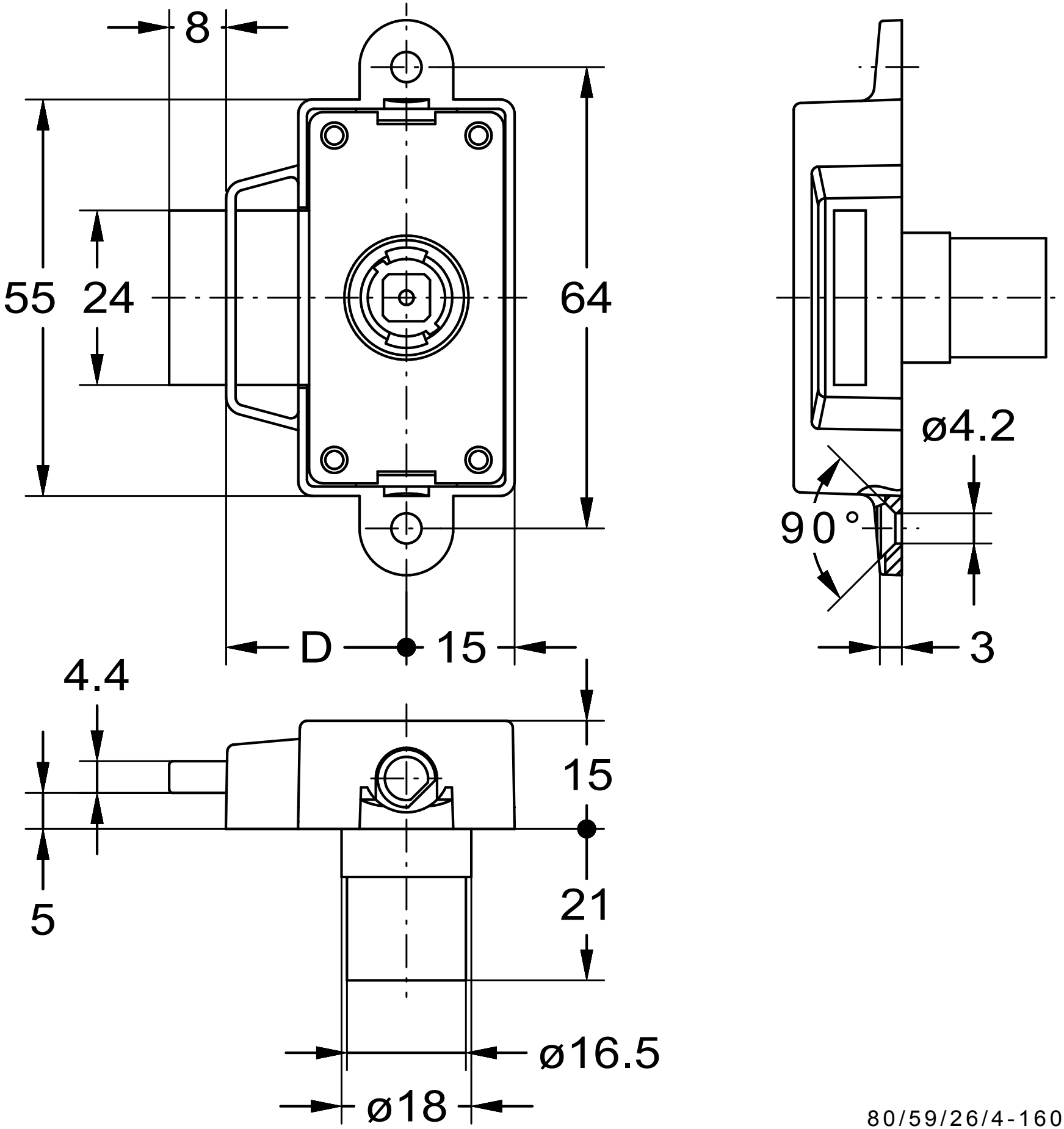

80/59/26/4-160428